Mathematical modeling of two parallel Josephson junctions stacks

I. R. Rahmonov[a,b], Yu. M. Shukrinov[a,b,c], P. Seidel[d], M. Grajcar[e], A. Plecenik[e] and W. Nawrocki[f]

rahmonov@theor.jinr.ru, ilhom-tj@inbox.ru

[a]BLTP, Joint Institute for Nuclear Research, Dubna, Russia
[b]Umarov Physical Technical Institute, Dushanbe, Tajikistan
[c]Dep. of Theoretical Physics, International University of Dubna, Dubna, Russia
[d]Institut für Festkörperphysik, Friedrich-Schiller-Universität Jena, Jena, Germany
[e]Department of Experimental Physics, Comenius University, Bratislava, Slovakia
[f]Poznan University of Technology, Poznan, Poland

Abstract

We derived the system of nonlinear differential equations for describing of the phase dynamics of two parallel stacks of JJ in the framework of the CCJJ+DC model. Using the fourth order Runge-Kutta method we solve this system of equations and calculate the total current voltage characteristics (CVC) for the system with different N_1 and N_2 JJs. Superconducting, quasiparticle, displacement and diffusion currents and CVC for each stack are described in detail. Analysis of the CVC shows the features related to the transitions between the states with different number of rotating and oscillating junctions. Transition in one stack stimulates the corresponding transition in another one.

Model and numerical method

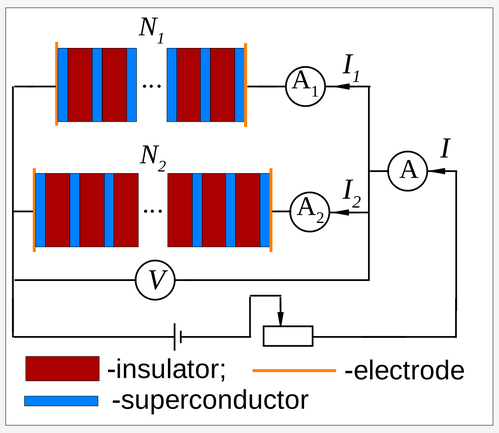

Fig.1 Scheme of the parallel connection of the two stacks of JJs. Superconductor-Insulator-superconductor (SIS) model.

System of the normalized equations, which describe above scheme, can be written as [1,2]

$$\begin{cases} \dot{\psi}_m = U_m - \alpha_1(U_{m+1} + U_{m-1} - 2U_m) \\ \dot{\varphi}_l = V_l - \alpha_2(V_{l+1} + V_{l-1} - 2V_l) \\ \dot{U}_m = \dfrac{1}{C}\Big(I - I_c \sin\psi_m - \mu\dot{\psi}_m - \dot{V}_l - \sin\varphi_l + \beta\dot{\varphi}_l\Big) \\ \dot{V}_l = \sum\limits_{k=1}^{N_2} B_{lk}^{-1}\Big[N_1\Big(I - \sin\varphi_k - \beta\dot{\varphi}_k\Big) - \\ - \sum\limits_{n=1}^{N_1}\Big(I_c \sin\psi_n + \mu\dot{\psi}_n\Big)\Big] \end{cases} \quad (1)$$

where ψ_m and U_m are phase differences and voltage of m-th JJ in the first stack. φ_l and V_l are phase differences and voltage of l-th JJ in the second stack. N_1, N_2–number of JJ, α_1, α_2 – coupling parameters, μ, β–dissipation parameters respectively for the first and second stacks. Voltage V_l and U_m are normalized to $V_0 = \dfrac{\hbar\omega_p}{2e}$, bias current I– to critical current I_{c2} of JJ of the second stack, time t – to plasma frequency $\omega_p = \sqrt{\dfrac{2eI_{c2}}{C_2\hbar}}$ of JJ of the second stack.

Here $I_c = \dfrac{I_{c1}}{I_{c2}}$, $R = \dfrac{R_1}{R_2}$ and $C = \dfrac{C_1}{C_2}$ respectively are the ratio of critical current, resistance and capacitance of JJs of stack 1 and 2. The dissipation parameter is $\beta = \dfrac{1}{R_2}\sqrt{\dfrac{\hbar}{2eI_{c2}C_2}}$, $\mu = \dfrac{\beta}{R}$.

The matrix B have a form as

$$B = \begin{pmatrix} C+N1 & C & \dots & & C \\ C & C+N1 & C & \dots & C \\ \vdots & \vdots & \vdots & \vdots & \vdots \\ C & \dots & C & C+N1 & C \\ C & & \dots & C & C+N1 \end{pmatrix}$$

Using the 4th order Runge-Kutta method we solve above system of equations at fixed value of external current I, in time domain $[0 \div T_{max}]$ and find phase differences φ and Voltage V as function of time. Averaging on the time domain Voltage we find one point of CVC. Increasing I to δI process repeats. External current increases till I_{max} and decreases to zero.

CVC of the two parallel JJ stacks

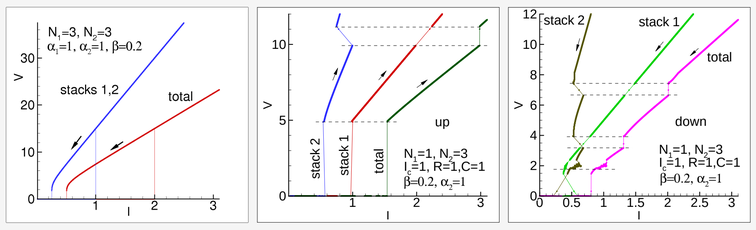

Fig.2 CVC of the two parallel JJ stacks: (a) for $N_1 = 3$, $N_2 = 3$; (b) for $N_1 = 1$, $N_2 = 3$ by the increasing of I; (c) for $N_1 = 1$, $N_2 = 3$ by the decreasing of I.

Dependence of average currents on the bias current

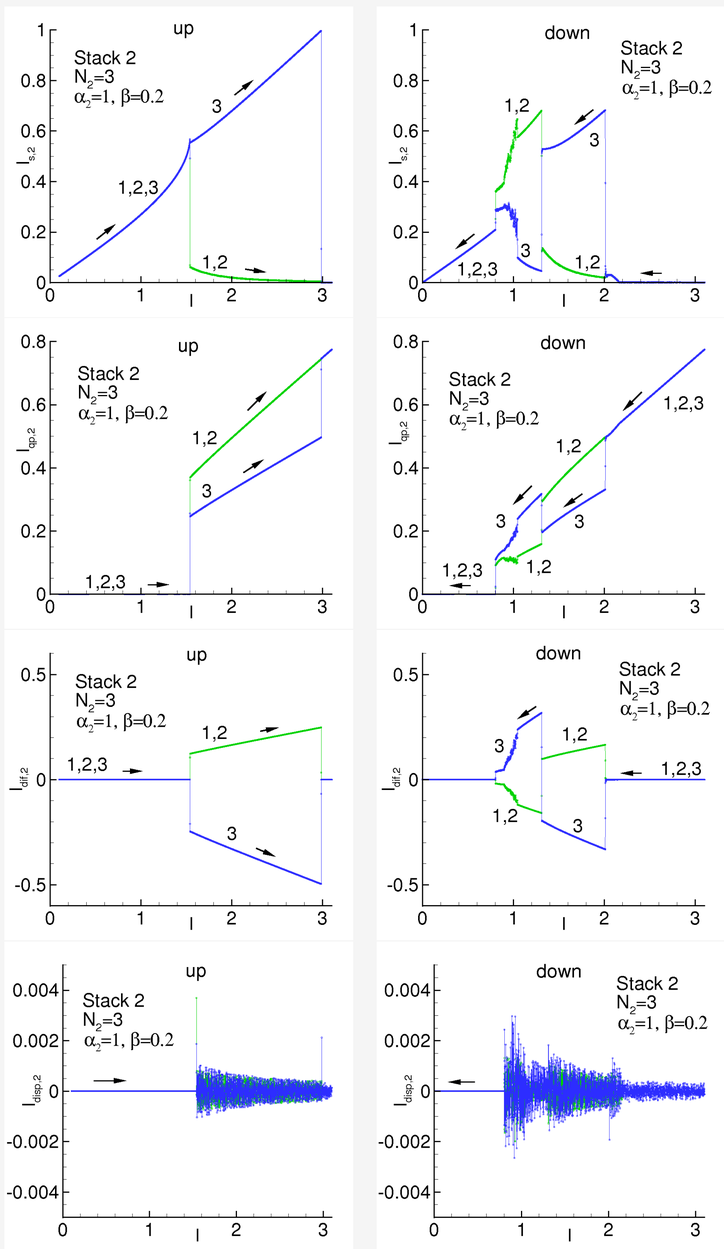

Fig.3 Average superconducting, quasiparticle, diffusion and displacement currents depending on the bias current for the second stack by increasing and decreasing of bias current.

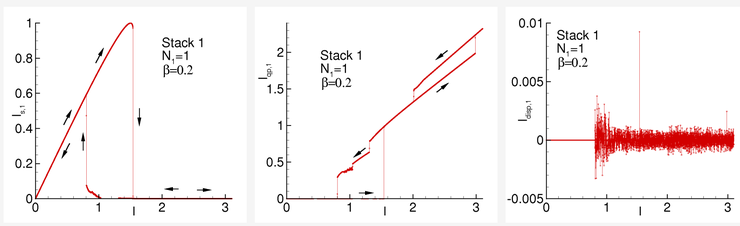

Fig.4 Average superconducting, quasiparticle and displacement currents depending on bias current for first stack by increasing and decreasing of bias current.

Time dependence of the electric charge in the superconducting layers

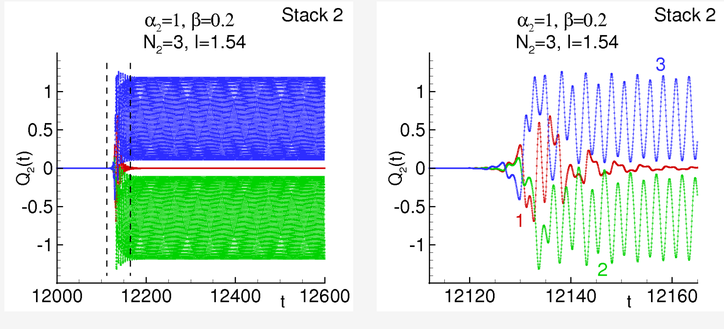

Fig.5 Charge–time dependence in the superconducting layers for the second stack at $I = 1.54$.

Time dependence of the currents

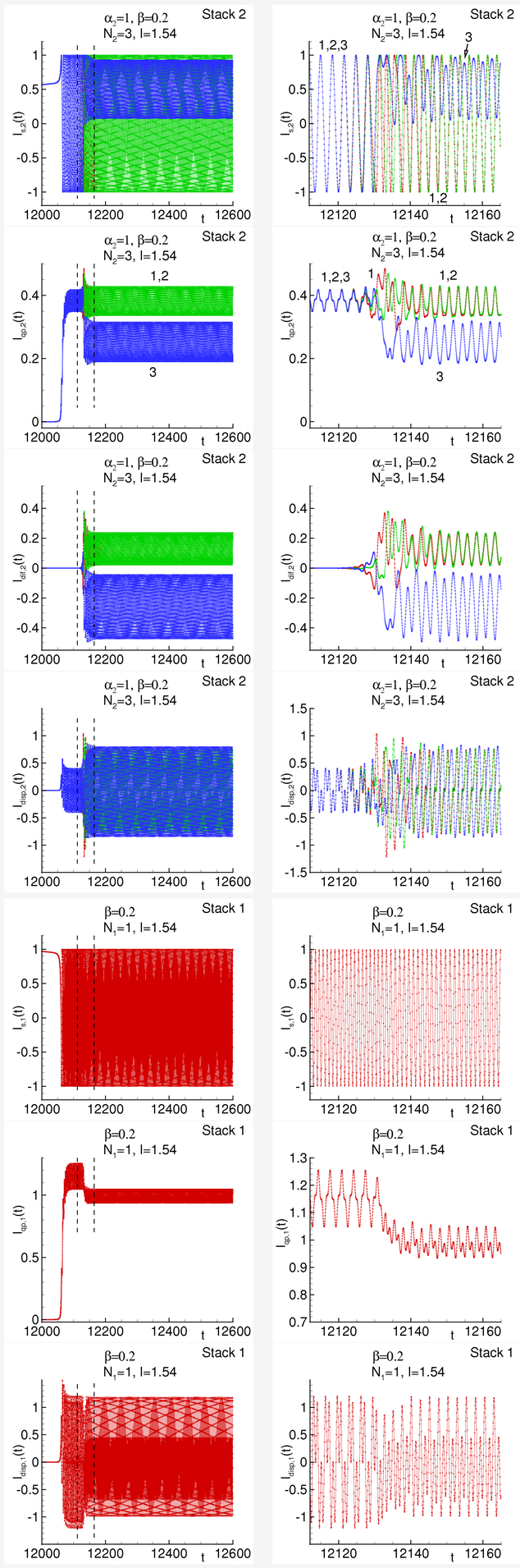

Fig.6 Time dependence of the superconducting, quasiparticle, diffusion and displacement currents at $I = 1.54$.

Conclusions

1. We found that when the current through the one stack reaches the critical value, all JJs go to the rotating state for short time and then some of them return back to the oscillating state. In this region of CVC charge density wave is formed along the stack forms.

2. In the hysteresis region of CVC we have observed an unstable rotating states. Such behavior is not observed in the case of single stack.

References

[1] I. R. Rahmonov and Yu. M. Shukrinov, Particle and Nuclei Lett. **11**, N 6 (2014) accepted.

[2] Yu. M. Shukrinov, P. Seidel, E. Ilichev, W. Nawrocki, M. Grajcar, P. A. Plecenik, I. R. Rahmonov and K. V. Kulikov, Journal of Physics: Conf. Ser. **393**, 012020 (2012).